PCET LIBRARY BANGALORE-49

CBCS SCHEME

USN | | | | | | | | | |

BME301

Third Semester B.E./B.Tech. Degree Examination, June/July 2026
Mechanics of Materials

Time: 3 hrs. Max. Marks: 100

Note: 1. Answer any FIVE full questions, choosing ONE full question from each module.
2. M : Marks , L: Bloom's level , C: Course outcomes.

		Module – 1	M	L	C
Q.1	a.	Define (i) Stress (ii) Strain (iii) Young's Modulus	3	L1	CO1
	b.	Explain with a neat sketch stress-strain diagram for mild steel subjected to tensile load.	7	L2	CO1
	c.	A brass bar, having cross sectional area of 900 mm^2 is subjected to axial forces as shown in Fig. Q1 (c). Find the total elongation of the bar. Take $E = 1 \times 10^5$ N/mm^2. 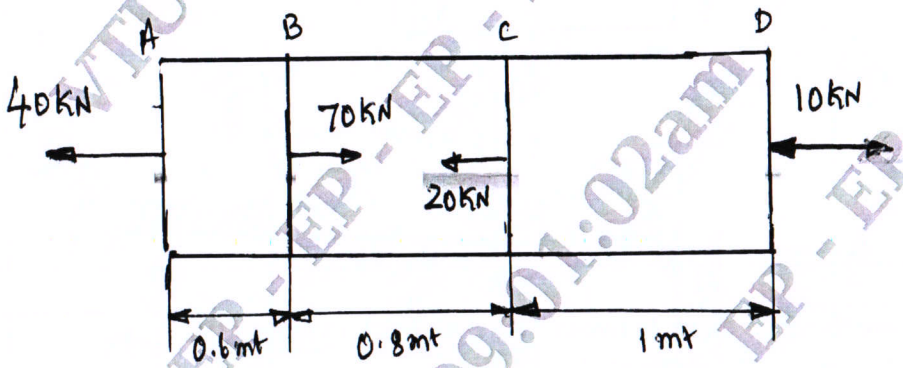 Fig. Q1 (c)	10	L3	CO1
		OR			
Q.2	a.	Define (i) Modulus of elasticity (ii) Volumetric strain (iii) Bulk modulus	3	L1	CO1
	b.	Derive an expression deformation in tapering bar of circular cross section.	7	L2	CO1
	c.	An aluminium bar of 50 mm dia is stressed in a testing machine. At a certain instant the applied force is 100 kN. While measured elongation of rod is 0.219 mm in a 300 mm gauge length and decreases in diameter is 0.01215 mm. Calculate elastic constants of the materials.	10	L3	CO1
		Module – 2			
Q.3	a.	What is Principal Planes and Principal Stresses?	2	L1	CO2

EP - EP - EP -

	b.	A point in a strained material, the stresses on two planes at right angles to each other are 80 N/mm^2 (tensile) and 40 N/mm^2 (tensile). Each of the above stress is accompanied by a shear stress of 60 N/mm^2. Determine normal stress, shear stress and resultant stress on an oblique plane inclined at an angle of 45° to the axis of minor tensile stress. Also find major principal stress minor principal stress and their location, maximum shear stress and its location. Verify the answers with Mohr's Circle Method. Refer Fig. Q3 (b) 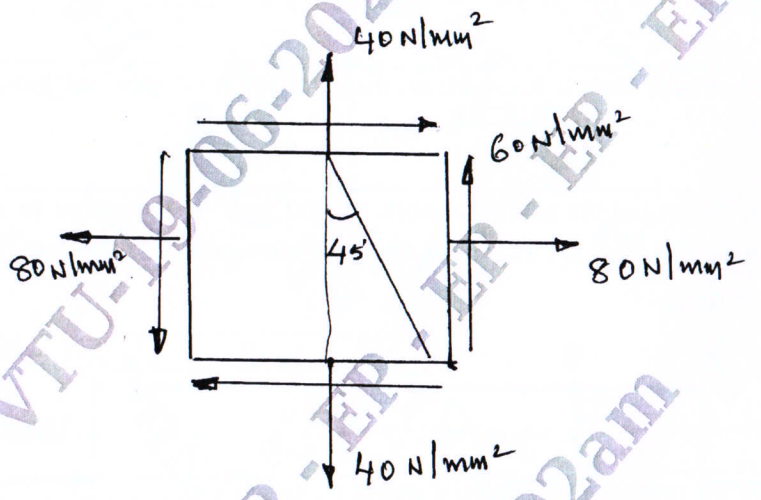 Fig. Q3 (b)	**18**	**L3**	**CO2**
		OR			
Q.4	**a.**	What are the differences between Thin and Thick cylinders?	**4**	**L1**	**CO2**
	b.	Derive an equation for circumferential stress in thin cylinder.	**4**	**L2**	**CO2**
	c.	A thin cylinder, 2 m long and 200 mm in diameter with 10 mm thickness is filled completely with a fluid, at the atmospheric pressure. If an additional 25000 mm^3 fluid is pumped in, find the longitudinal and hoop stress developed. Also determine the changes in diameter and length if, E = 2 ×10^5 N/mm^2 and Poison's ratio = 0.3.	**12**	**L3**	**CO2**
		Module – 3			
Q.5	**a.**	Briefly explain the different types of loads.	**5**	**L2**	**CO3**

VTU-19-06-2026 08:42:18am
EP - EP - EP - EP - EP - EP - EP - EP
19-06-2026 09:01:02am
EP - EP - EP - EP - EP - EP - EP - EP

	b.	Draw SFD and BMD for the beam shown in Fig. Q5 (b) and also find point of contraflexure. 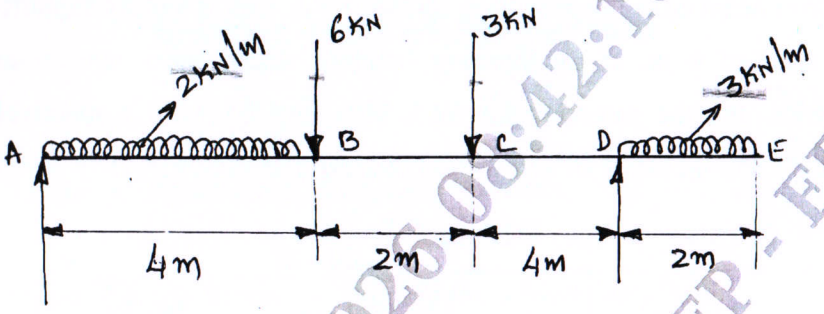 Fig. Q5 (b)	**15**	**L3**	**CO3**

		OR			
Q.6	**a.**	Derive the relationship between load, shear force and bending moment.	**5**	**L2**	**CO3**
	b.	Draw SFD and BMD for a overhanging beam shown in Fig. Q6 (b) and locate the point of contraflexture. 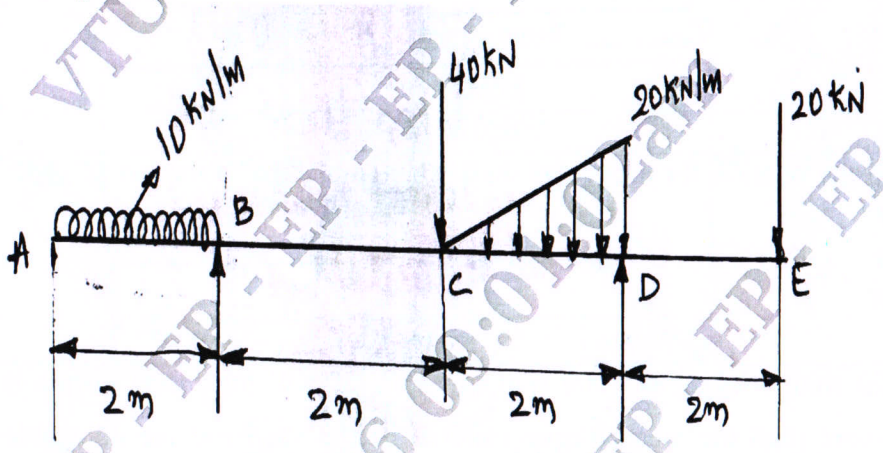 Fig. Q6 (b)	**15**	**L3**	**CO3**
		Module – 4			
Q.7	**a.**	Prove that $\frac{M}{I}=\frac{\sigma}{Y}=\frac{E}{R}$ with usual notations.	**10**	**L2**	**CO4**
	b.	A simply supported beam of span 5 m has a cross sectional $150mm \times 250mm$ if the permissible stress is 10 N/mm^2, find (i) Max intensity of UDl it can carry. (ii) Max concentrated load 'P' applied at 2 m from one end it can carry.	**10**	**L3**	**CO4**

		OR			
Q.8		A Cast Iron beam of uniform section shown in Fig. Q8 is simply supported over a span of 6 m. If the limiting bending stress under tension and compression for the material are 32.5 MPa and 65 MPa respectively. Determine UDL inclusive of self weight that the beam can carry. 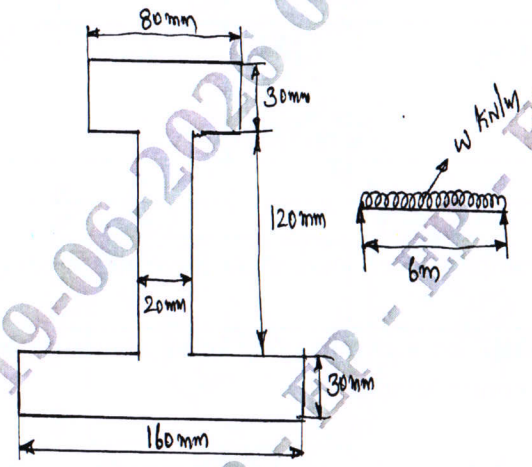 Fig. Q8	**20**	**L3**	**CO4**
		Module – 5			
Q.9	**a.**	Derive the relation for a circular shaft when subjected to torsion as given below : $\frac{T}{J} = \frac{\tau}{R} = \frac{G\theta}{l}$	**10**	**L2**	**CO5**
	b.	A solid shaft rotating at 1000 rpm transmits 50 kW maximum torque is 20% more than the mean torque material of the shaft has the allowable shear stress of 50 MPa and modulus of rigidity 80 GPa. Angle of twist in the shaft should not exceed 1° in one metre length. Determine the diameter of the shaft. Based on strength criterion and based on rigidity criterion.	**10**	**L3**	**CO5**
		OR			
Q.10	**a.**	Define slenderness ratio and derive Euler's expression for buckling load for column with both ends are hinged.	**8**	**L2**	**CO5**
	b.	A 1.5 m long column has a circular cross section of 50 mm diameter. One end of the column is fixed in direction and position and the other end is free. Taking the factor of safety as 3. Calculate the safe load using, (i) Rankine's formula taking yield stress 560 N/mm^2 and $\alpha = \frac{1}{1600}$. (ii) Euler's formula, taking $E = 1.2 \times 10^5$ N/mm^2.	**12**	**L3**	**CO5**

* * * * *

VTU-19-06-2026 08:42:18am - EP - EP - EP